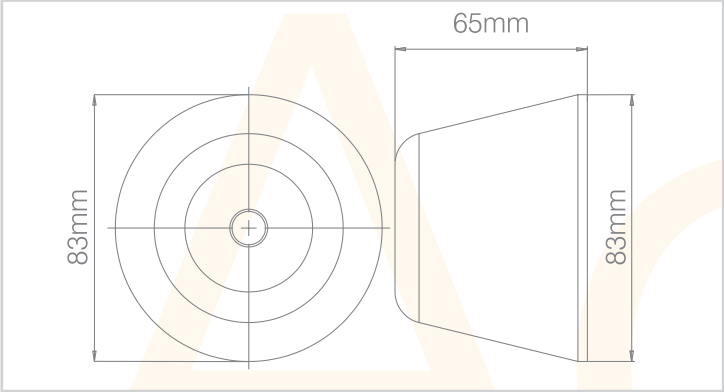

AC12280

CT1400 Ceiling Rose Cover

- Cover for CT1400
- When rose fitted, not suitable for use with push-in connectors or CT103

Technical Specification	
Dimensions	85mm Diameter x 65mm
Operational Temp.	-5°C to +40°C
Warranty	10 Years

1-AC12280-2021-V1

Electric Center are not responsible for the accuracy and contents of this datasheet.
All displayed data and specification detail has been provided by the product manufacturer.