Acel

3 - Circuit Protection
& Industrial Control

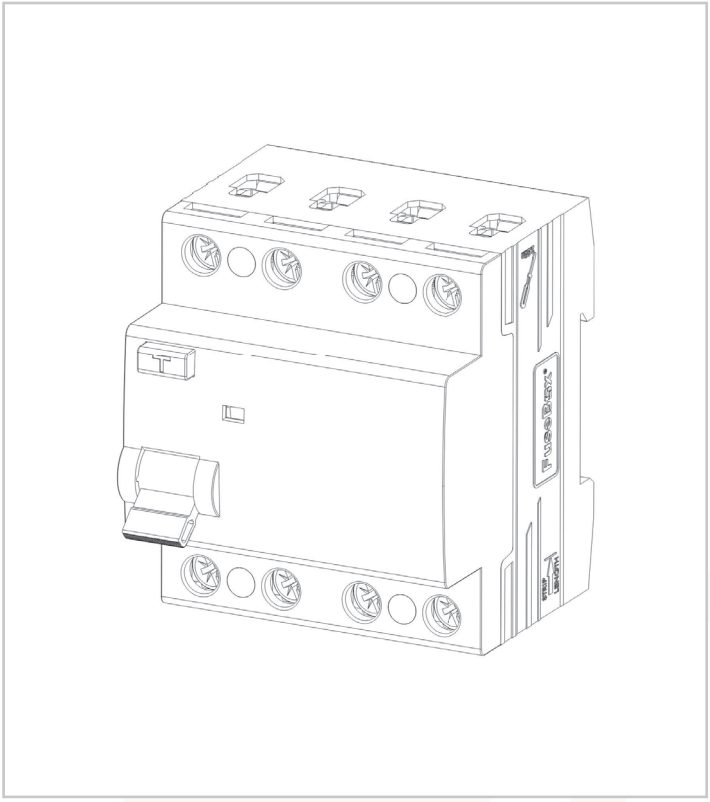

## Acel part number (AC35190)

# RCD 100A 30mA 4P type A

### Features and benefits

Type A
4 Pole
10kA
ARCDLKTPN fitting kit required

| Technical Specification | |
|---|---|
| Attribute | Value |
| | |
| | |
| | |
| | |
| | |
| | |
| | |
| | |
| | |
| | |
| | |
| | |
| | |
| | |

3-AC35190-2024-V1



Electric Center are not responsible for the accuracy and contents of this datasheet.
All displayed data and specification detail has been provided by the product manufacturer.